of the shielded cable is comprised of cooper braids to suppress radio frequency interference. To enhance the shield performance and conductivity, the braided density of the shield must be greater than 90%.

Observe national or regional regulations when selecting cable dimensions. The IEC cable must meet the following requirements:

- EN 60204-1 and IEC 60364-5-52 standards
- Copper conductors with PVC insulation
- Ambient temperature: 40°C; cable surface temperature: 70°C. Contact the manufacturer if the ambient temperature exceeds 40°C).

For details about requirements on UL cable selection, see *" Cable requirements" on page 113*.

Note

If the recommended cable specifications for peripheral devices or optional parts exceed the applicable cable specification range, contact Inovance.

4.2.4 Main circuit terminal layout

Size A (rated power: 0.2 kW–0.4 kW): SV660PS1R6I, SV660PS2R8I

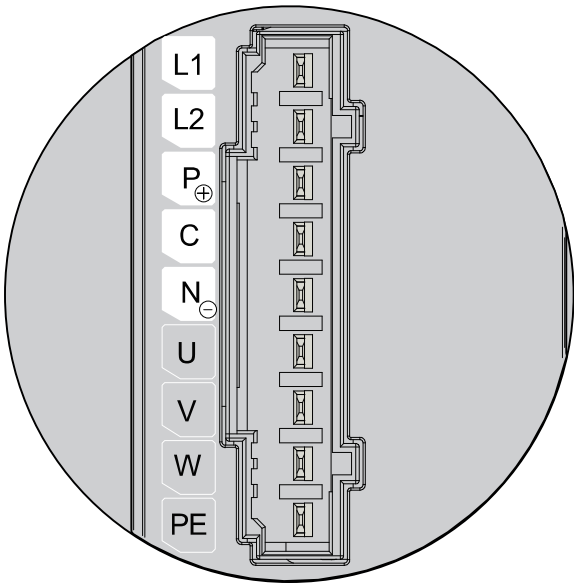

Figure 4-8 Main circuit terminal pins of size A drive

Table 4–10 Description of main circuit terminal pins of servo drives in size A

No.	Parameter Name	Description
1	L1, L2 (power input terminals)	See the nameplate for the rated voltage class.
2	P⊕, NΘ (DC bus terminals)	Used by the common DC bus for multiple servo drives.
	P⊕, C Terminals for connecting external braking resistor	If an external regenerative resistor is needed, connect it between terminals P⊕ and C.
3	U, V, W (terminals for connecting the servo motor)	Connected to U, V, and W phases of the servo motor.
4	Motor grounding terminal	Connected to the grounding terminal of the motor for grounding purpose.

Rated power: (SIZE B: 0.75 kW): SV660PS5R5I

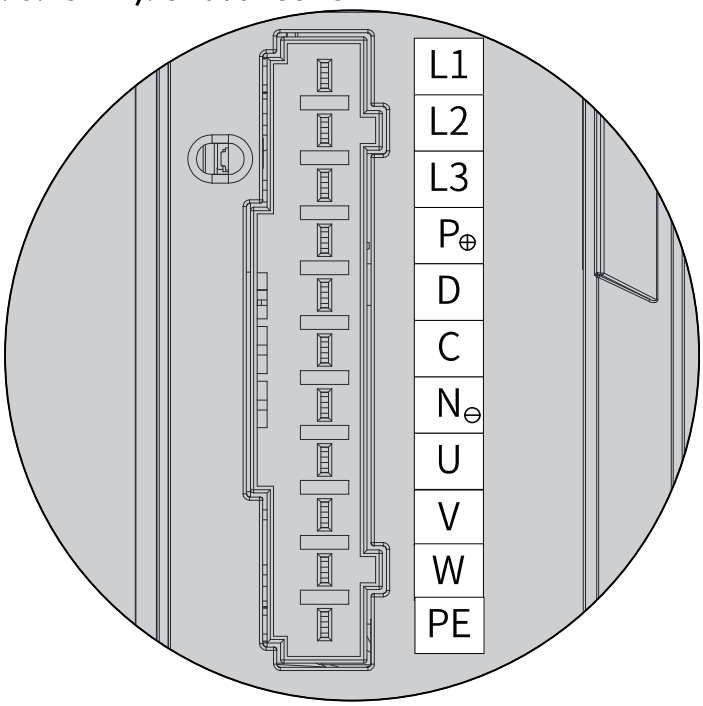

Figure 4-9 Pin assignment of main circuit terminal of servo drives in SIZE B

Table 4–11 Description of main circuit terminal pins of servo drives in SIZE B

No.	Parameter Name	Description
1	L1, L2, L3 (power input terminals)	See the nameplate for the rated voltage class. Note: S5R5 (750 W) models support single-phase 220 V input only, with a 220 V power supply connected between terminals L1 and L2.
2	P⊕, NΘ (DC bus terminals)	Used by the common DC bus for multiple servo drives.
	P⊕, D, C Terminals for connecting external braking resistor	If an external regenerative resistor is needed, connect it between terminals P⊕ and C. Servo drives in size B are equipped with the built-in regenerative resistor, with terminals P⊕ and D jumpered by default.
3	U, V, W (terminals for connecting the servo motor)	Connected to U, V, and W phases of the servo motor.
4	Motor grounding terminal	Connected to the grounding terminal of the motor for grounding purpose.

Rated power (SIZE C/SIZE D: 1.0kW–1.5kW): SV660PS7R6I, SV660PS012I

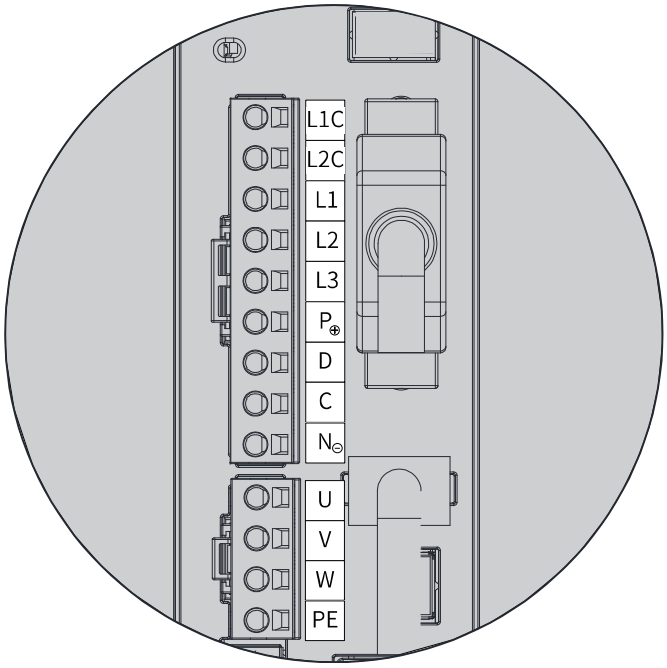

Figure 4-10 Main circuit terminal pin layout of servo drives in size C (SV660PS7R6I) and size D (SV660PS012I)

Table 4–12 Description of main circuit terminal pins of servo drives in size C (SV660PS7R6I) and size D (SV660PS012I)

No.	Parameter Name	Description
1	L1C, L2C Control circuit power input terminals	See the nameplate for the rated voltage class.
2	L1, L2, L3 Main circuit power input terminals	See the nameplate for the rated voltage class.
3	P⊕, NΘ (DC bus terminals)	Used by the common DC bus for multiple servo drives.
	P⊕, D, C Terminals for connecting external braking resistor	If an external regenerative resistor is needed, connect it between terminals P⊕ and C. SIZE C and SIZE D use a built-in regenerative resistor, with terminals P⊕ and D jumped.
4	U, V, W (terminals for connecting the servo motor)	Connected to U, V, and W phases of the servo motor.
5	Motor grounding terminal	Connected to the grounding terminal of the motor for grounding purpose.

Servo drives in size C and size D (rated power: 1.0 kW to 3.0 kW): SV660PT3R5I, SV660PT5R4I, SV660PT8R4I, and SV660PT012I

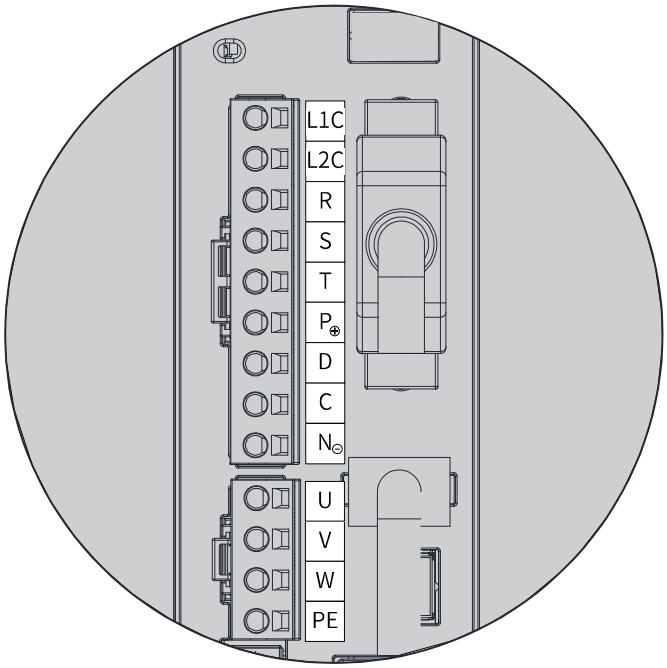

Figure 4-11 Main circuit terminal pin layout of servo drives in size C (SV660PT3R5I, SV660PT5R4I) and size D (SV660PT8R4I, SV660PT012I)

Table 4–13 Description of main circuit terminal pins of servo drives in size C (SV660PT3R5I, SV660PT5R4I) and size D (SV660PT8R4I, SV660PT012I)

No.	Parameter Name	Description
1	L1C, L2C Control circuit power input terminals	See the nameplate for the rated voltage class.
2	R, S, and T Main circuit power input terminals	See the nameplate for the rated voltage class.
3	P⊕, NΘ (DC bus terminals)	Used by the common DC bus for multiple servo drives.
	P⊕, D, C Terminals for connecting external braking resistor	If an external regenerative resistor is needed, connect it between terminals P⊕ and C. SIZE C and SIZE D use a built-in regenerative resistor, with terminals P⊕ and D jumped.
4	U, V, W (terminals for connecting the servo motor)	Connected to U, V, and W phases of the servo motor.
5	Motor grounding terminal	Connected to the grounding terminal of the motor for grounding purpose.

Size E (rated power: 5.0 kW to 7.5 kW): SV660PT017I, SV660PT021I, and SV660PT026I

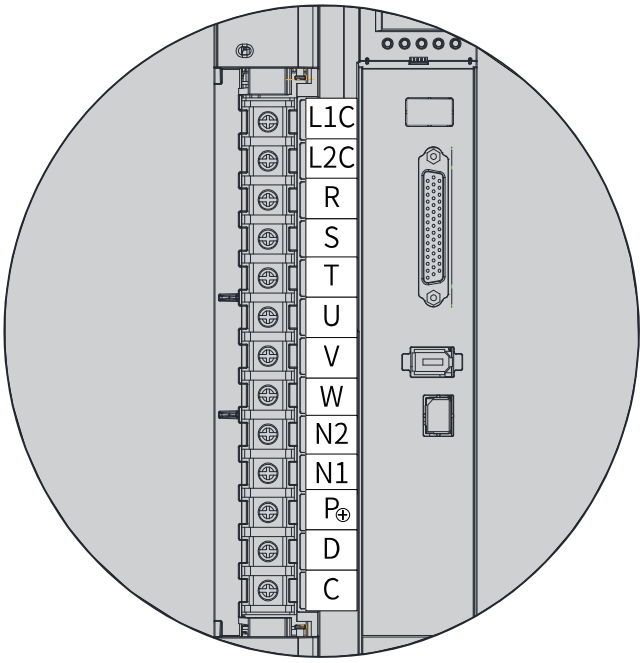

Figure 4-12 Pin assignment of main circuit terminal of servo drives in size E

Table 4–14 Description of main circuit terminal pins of servo drives in size E

No.	Parameter Name	Description
1	L1C, L2C Control circuit power input terminals	See the nameplate for the rated voltage class.
2	R, S, and T Main circuit power input terminals	See the nameplate for the rated voltage class.
3	U, V, W (terminals for connecting the servo motor)	Connected to U, V, and W phases of the servo motor.
4	N2, N1 Terminals for connecting external reactor	Terminals and are shorted by default. When the power high-order harmonics need to be suppressed, remove the jumper and connect a reactor between N1 and N2. Install a DC reactor between terminals N1 and N2.
5	P⊕, D, C Terminals for connecting external braking resistor	If an external regenerative resistor is needed, connect it between terminals P⊕ and C. SIZE E use a built-in regenerative resistor, with terminals P⊕ and D jumped.

4.2.5 Connecting the Motor (UVW)

Keep the lead wire of the motor cable shield as short as possible, with its width (b in the following figure) not shorter than 1/5 of its length (a in the following figure).

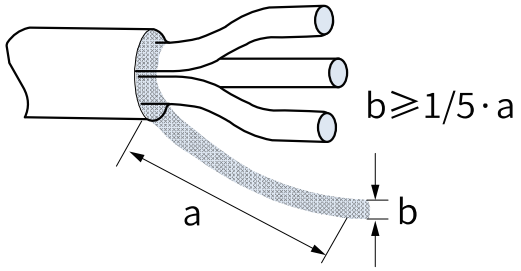

Figure 4-13 Lead-out of the motor cable shield

- The following figure shows the wiring diagram for a terminal-type motor.

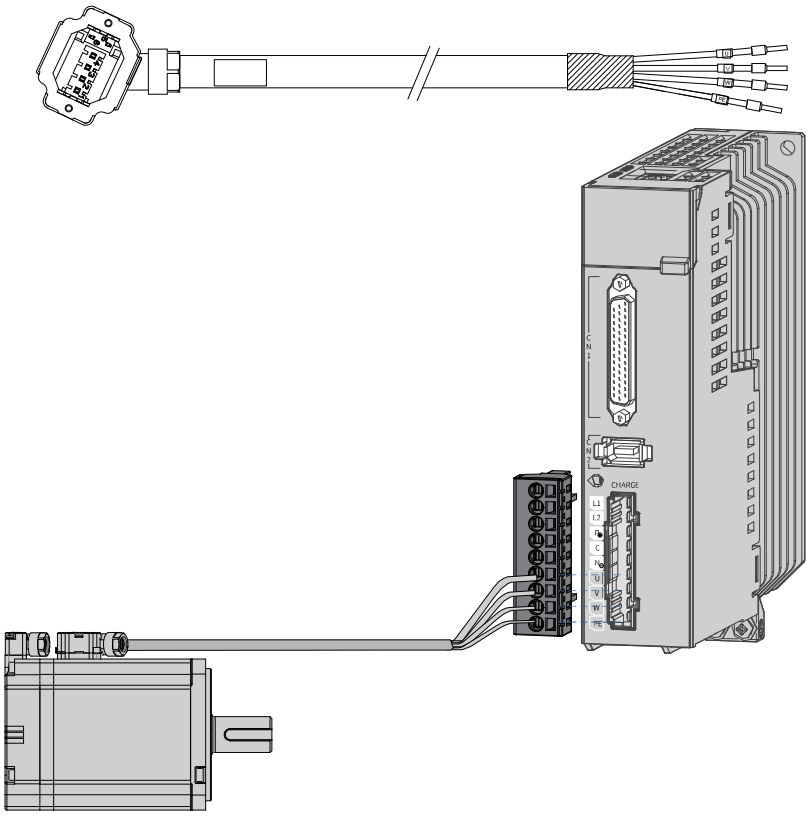

Figure 4-14 Wiring between the servo drive and terminal-type motor

Table 4–15 Description of the power cable connector (motor side)

Flange Size [1]	Illustration	Pin		
		Pin No.	Signal Name	Color
Terminal-type: 40 60 80	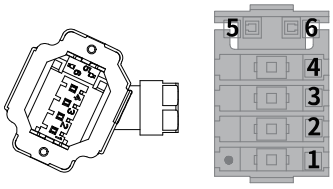 Black 6-pin connector	1	PE	Yellow/ Green
		2	W	Red
		3	V	Black
		4	U	White
		5	Brake (polarity insensitive)	Brown
		6		Blue

Note

- [1] The flange size refers to the width of the mounting flange (in mm).
- Power cable colors are subject to the actual product. All cable colors mentioned in this guide refer to Inovance cable colors.

- The connection diagram for a flying leads type motor is shown in the following figure.

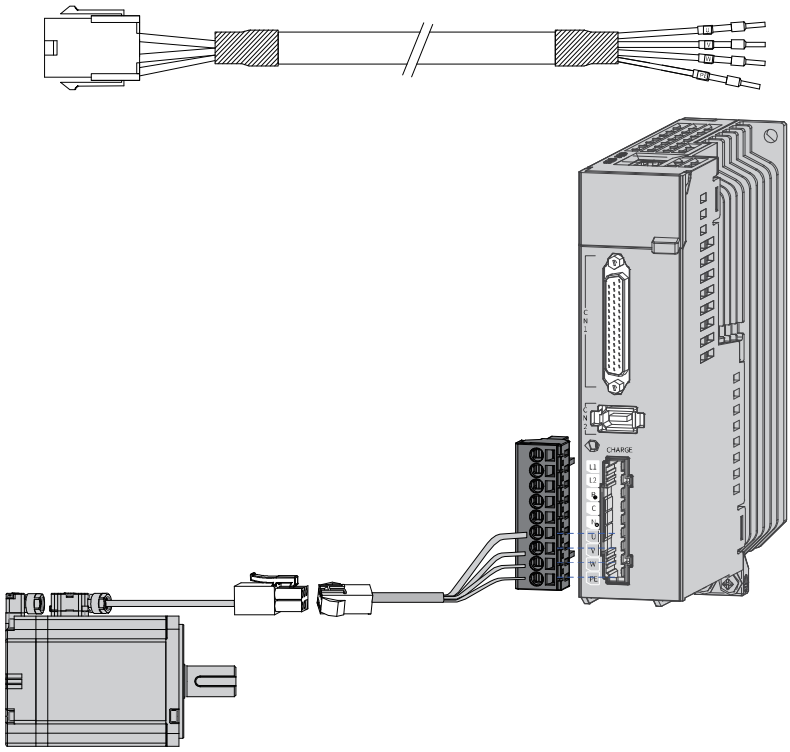

Figure 4-15 Wiring between the servo drive and terminal-type motor

Table 4–16 Description of the power cable connector (motor side)

Flange Size [1]	Illustration	Pin		
		Pin No.	Signal Name	Color
Flying leads type: 40 60 80	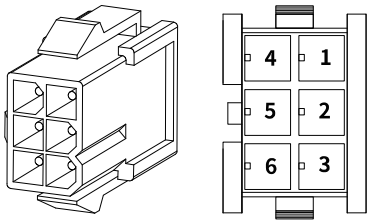 Black 6-pin connector Recommendation: Plastic housing: MOLEX-50361736 Terminal: MOLEX-39000061	1	U	White
		2	V	Black
		4	W	Red
		5	PE	Yellow/ Green
		3	Brake (polarity insensitive)	Brown
		6		Blue

Note

- [1]: The flange size refers to the width of the mounting flange.
- Power cable colors are subject to the actual product. All cable colors mentioned in this guide refer to Inovance cable colors.

- The following table describes the connector for high-power motor power cables.

Table 4–17 Description of the power cable connector (motor side)

Flange Size [1]	Illustration	Pin		
		Pin No.	Signal Name	Color
100 130	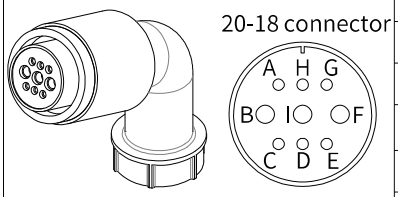 MIL-DTL-5015 series 3108E20-18S military-spec connector	B	U	Blue
		I	V	Black
		F	W	Red
		G	PE	Yellow/Green
		C	Brake (polarity insensitive)	Red
		E		Black

Table 4–18 Description of the power cable connector (motor side)

Flange Size [1]	Illustration	Pin		
		Pin No.	Signal Name	Color
180	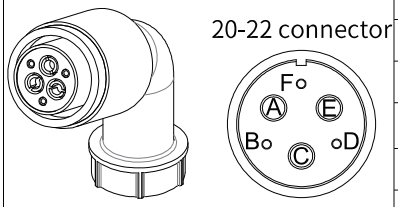 MIL-DTL-5015 series 3108E20-22S military-spec connector	A	U	Blue
		C	V	Black
		E	W	Red
		F	PE	Yellow/Green
		B	Brake (polarity insensitive)	Red
		D		Black

Note

- [1]: The flange size refers to the width of the mounting flange.
- Power cable colors are subject to the actual product. All cable colors mentioned in this guide refer to Inovance cable colors.

4.2.6 Wiring of External EMC Filter

Install the filter near the input terminals of the drive. The cable between the filter and the drive must be shorter than 30 cm. Connect the grounding terminal of the filter together with the grounding terminal of the drive. Ensure the filter and the drive are installed onto the same conductive mounting surface that is connected to the main grounding of the control cabinet.